Mid-Sem: Analog Electronic Circuits (S26.EC2.103)

Max. Marks: 25 Time: 8:30 AM - 10:00 AM Date: 02/03/2026

NOTE: No query allowed during the exam. Write your assumptions (if any) for each question.

Q1. A single-supply common-emitter BJT amplifier must be biased to operate correctly and usually includes input/output coupling capacitors.

a. Explain why a DC bias (quiescent) point is needed in such an amplifier. **[1 Mark]**

b. Why do coupling capacitors (input/output) commonly appear in single-supply BJT amplifiers? Name one biasing issue they solve. **[1 Mark]**

Q2 (a). Discuss the internal capacitances in BJT. What we call them? Who put them there? Can we eliminate them fully? Do these capacitance impacts the amplifier performances? If yes, how? Which capacitance you think is larger? **[2 Marks]**

(b). What is the Base-Width modulation and how does it affect transistor output characteristics and small-signal output resistance? **[2 Marks]**

(c). What issues do you find in the biasing of Fig.1? Discuss the solutions. **[2 Marks]**

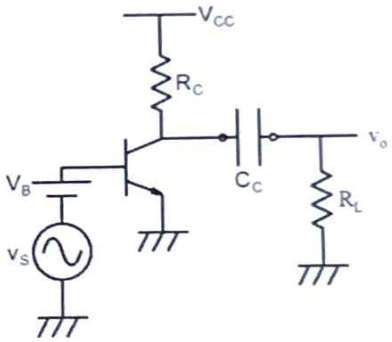

Fig. 1

Q3. Refer to the two BJT circuits shown in the Fig.2 (a) emitter-degeneration / divider-biased stage (b) Self-biased stage with base resistor R_B connected to the collector, Assume the transistor is in forward-active region and use V_{BE} as the base-emitter drop where required.

(a) DC Bias Point:

i. For **Fig. 2(a), assuming β is very large (i.e., base current I_B is negligible compared with the divider current)**: derive expressions for the I_C and V_{CE} in terms of V_{CC}, R_1, R_2, V_{BE}, R_E, R_C (show any approximations you use). **[2 Marks]**

ii. For **Fig. 2(b)**, derive expressions for the I_C and the V_{CE} in terms of R_B, β, V_{BE}, R_C, V_{CC} **[2 Marks]**

(b) Negative feedback and Small Signal Analysis:

i. Explain how negative feedback stabilizes the DC bias point in each circuit.

a. For Fig. 2(a), explain what happens to the bias point if the divider/base node voltage V_X is perturbed (i.e., "what if V_X changes?"). **[1.5 Marks]**

b. For Fig. 2(b), explain what happens to the bias point if the collector node V_Y is perturbed (i.e., "what if V_Y changes?"). **[1.5 Marks]**

ii. Draw the small-signal equivalent circuit for Fig.2(a) **[1 Mark]**

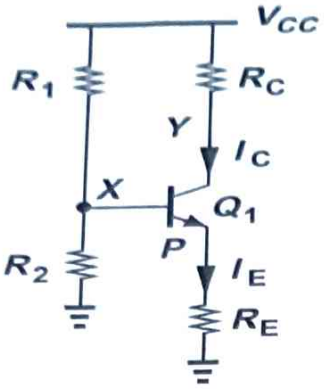

Fig. 2(a): Emitter Degeneration Biasing

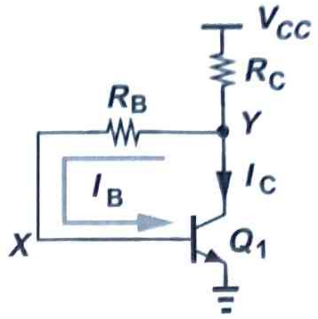

Fig. 2(b): Self Biased Stage

Q.3(a). Derive the small signal voltage gain, input, and output impedances of the circuit given in Fig.1. [5 Marks]

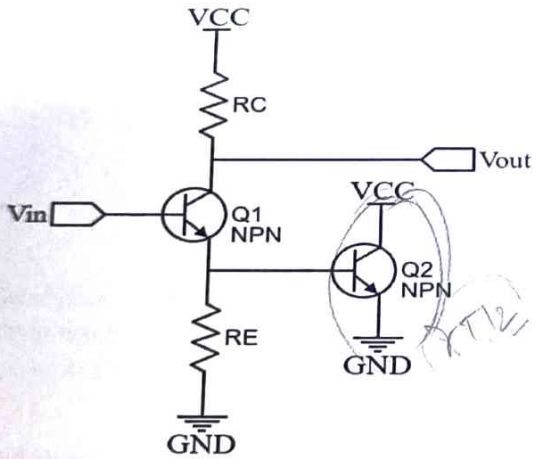

Fig. 3

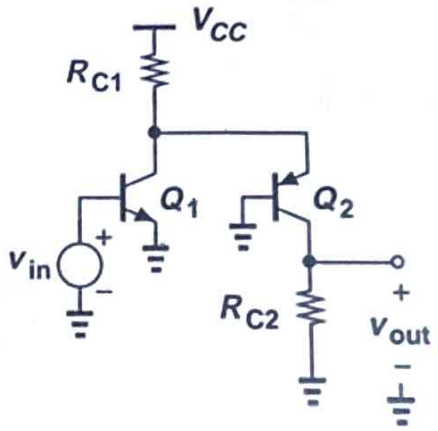

Fig. 4

(b). You are required to design the circuit in **Fig.3** to meet specific performance criteria:

V_{CC}: 9 V, Power = 10 mW, gain = $|A_v|$=5, β= 100, V_{BE} (on) = 0.7 V, $V_{CE(sat)min}$ = 0.2 V, $V_A = \infty$, V_T = 26mV.

Design the components such that you get maximum output swing.

Tabulate Rc, Re, V_{out} DC bias point, gm values

Assume perfect symmetry between the two branches, such that $I_{C1} = I_{C2}$. [3 Marks]

(c). Draw the small-signal equivalent circuit for the amplifier shown in Fig. 4. (V_A = finite)

[1 Mark]